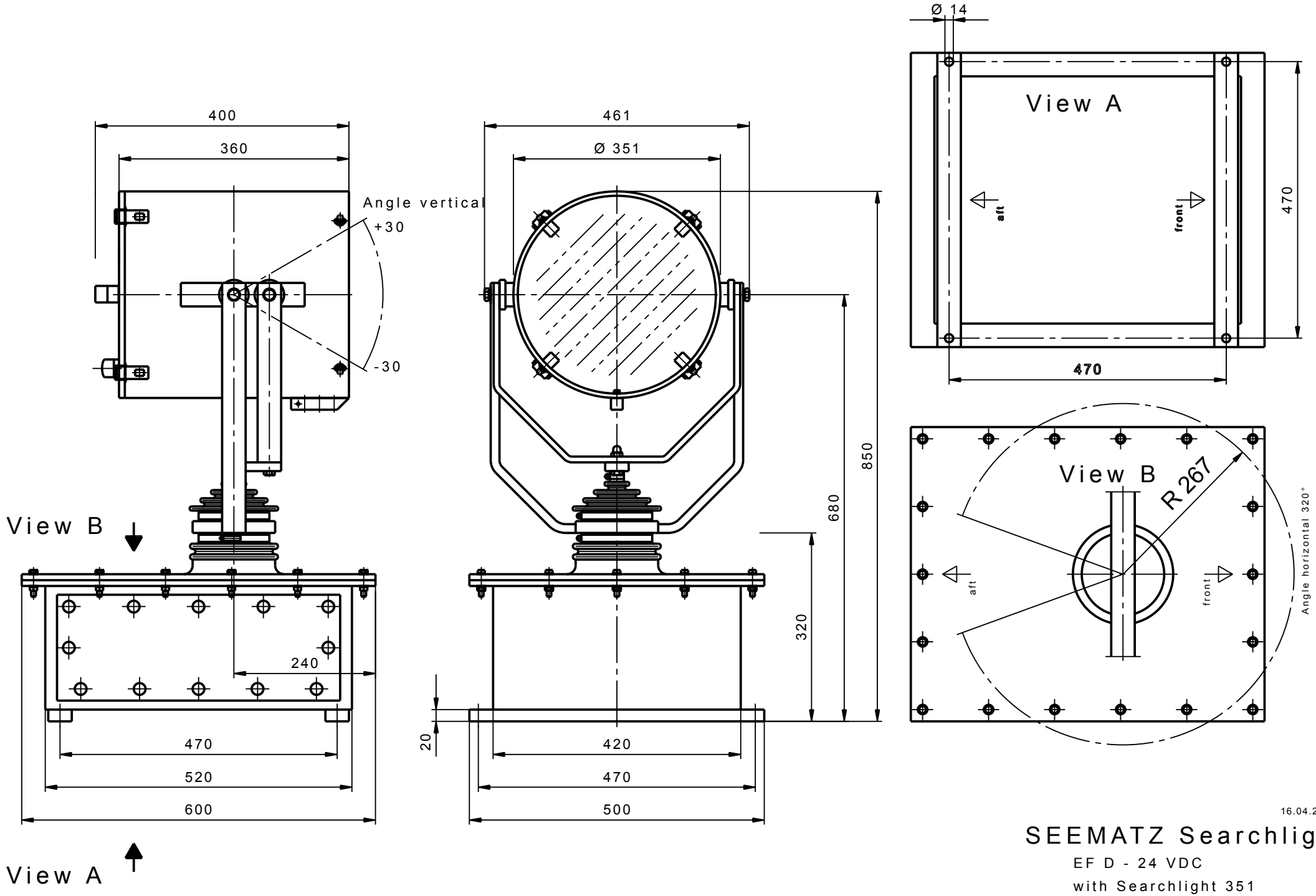

16.04.2

SEEMATZ Searchlig

EF D - 24 VDC

with Searchlight 351